Use of heat from locally generated sewer wastewater: case study old-age home Hofmatt, Switzerland

Wastewater as a heat source for heat pump systems represents a highly efficient energy source and energy sink. Its use is however often limited to big sewer diameters and high flow rates. This article presents an alternative to the use of heat from sewer wastewater: the use of the exhaust heat of locally generated wastewater as a regenerative and sustainable energy source for the production of service water and heating buildings, like in the example of the old-age home Hofmatt in Switzerland that is described below.

Figure 1: Old-age home Hofmatt in Münchenstein after the first stage of modernisation with the entrance to the wastewater shaft in the garden

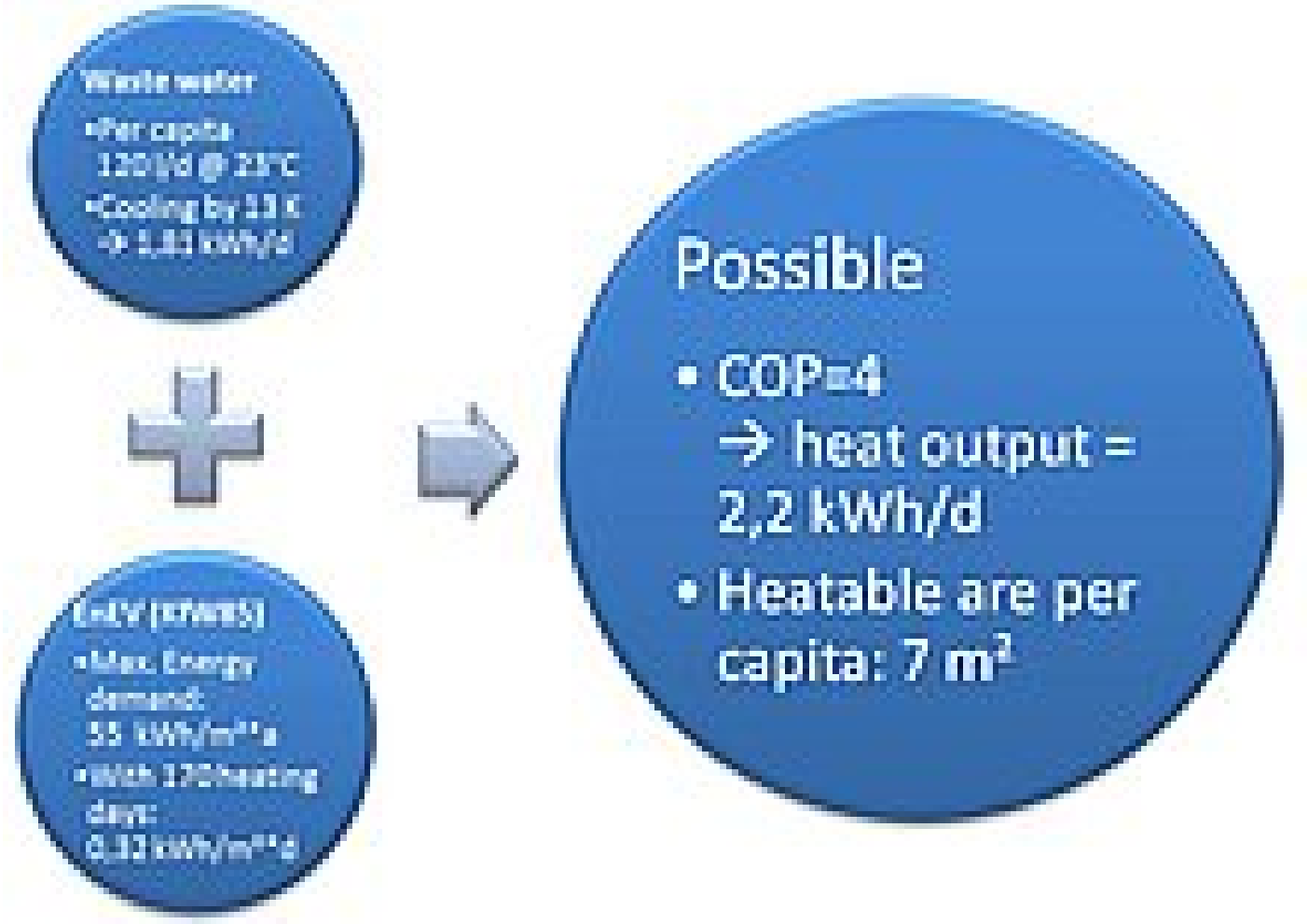

Figure 2: Example calculation for the daily per capita production of wasteawater energy

Introduction

Due to the ever improving quality of building shells the heat demand of modern buildings is decreasing continuously. Modern shells ensure to the greatest possible degree that the room air escapes or the room air is released to the open air via heat exchangers so that as little as possible of the energy gets lost. Such energy potential is hidden in our wastewater as well but usually runs off through the sewer system without being utilised. This is where wastewater heat utilisation comes into play. The aim is further use of the energy that is contained in wastewater.

To achieve this, heat exchangers are required to separate the dirty wastewater flow from a clean cooling water flow. Such heat exchangers are available for installation into a sewer or for external above-ground installation. They are field-tested systems that have proven their efficiency.

Most of the previously realised projects use the wastewater flow when it has already reached the sewer. In the old-age home Hofmatt in Switzerland we decided to take a new and very promising path: We use the in-house wastewater flow to recover energy to be used for heating purposes and to heat the service water.

The use of wastewater at source carries a great potential. The daily pro capita production of wastewater is 130 l on average. The water has a temperature of 23-25 °C. When cooled by 15 K approximately 2.26 kWh energy can be recovered per day and pro capita. With a permissible annual energy demand of 55 kWh/m² as according to KfW85 and assuming 170 heating days this amount of energy is sufficient to heat approximately 7 m² living space at 100 percent duty. One of the major energy leaks of modern buildings can directly be closed this way (see figure2).

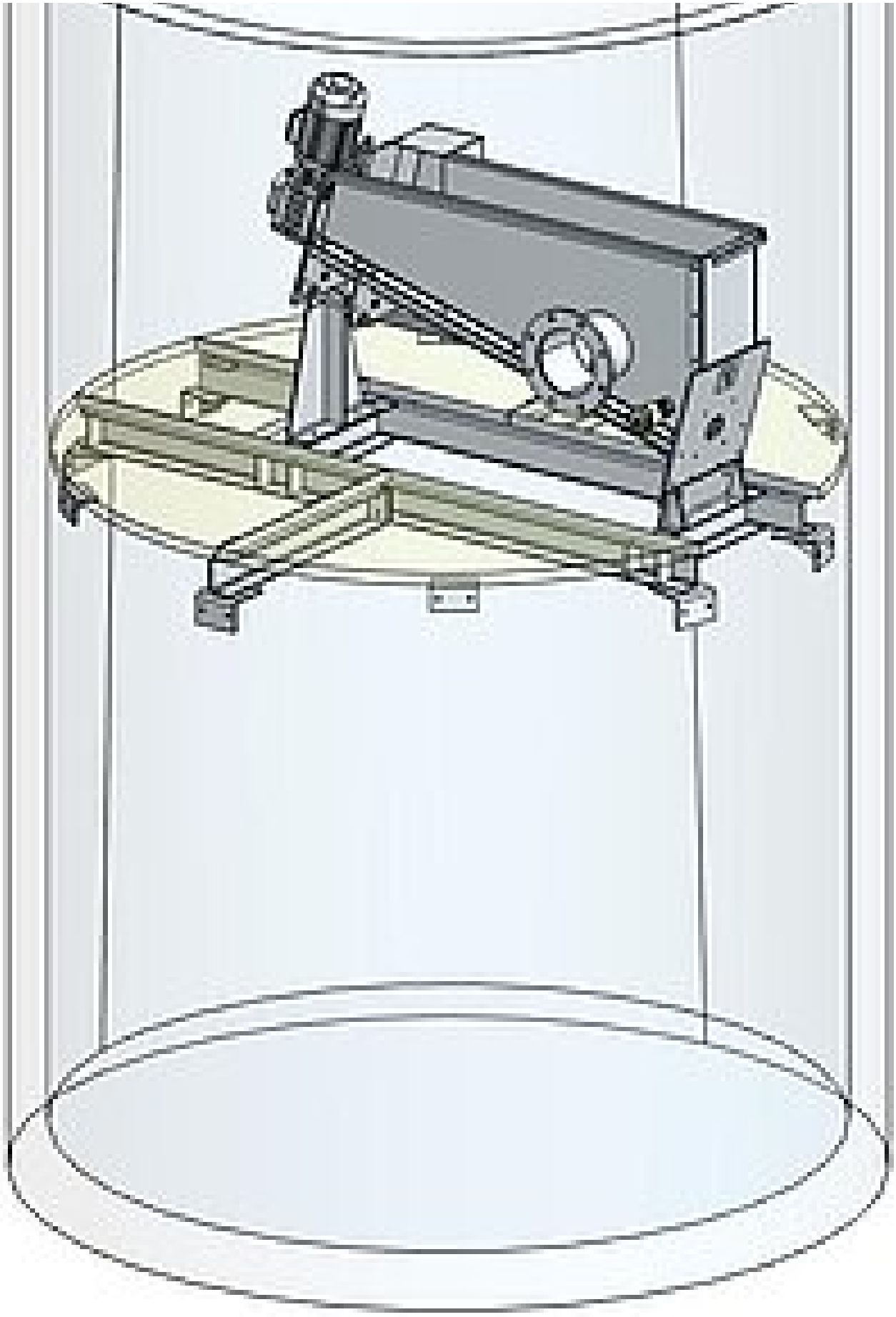

Figure 3: shaft with integrated fully automatic micro strainer for inlet screening

Figure 4: HUBER Heat Exchanger in the storage room beside the boiler room in the basement of the building

Project

History

Located in the picturesque scenery near the "garden town" Münchenstein not far from Basel, the old-age home Hofmatt is a foundation of the family Zaeslin in memory of their two sons who died in a train accident in 1891. At that time Hofmatt was a recreation home for convalescents from the spital in Basel. From 1940 on the home was used as a protectory before, in the sixties, it became an old-age and nursing home. The first wing with about 60 beds was built from 1966 to 1968, the additional west wing was erected in 1977. The home was modernised for the first time in 1984 and another extension followed in 1995 which laid the basis for the nursery with 124 beds.

In 2010, planning started to completely renovate and once again expand the building. It was at IFAT 2010 when HUBER SE for the first time presented a heat exchanger which is especially designed for wastewater applications. When the engineers of ETA Group learnt about it they presented their idea of small decentralized solutions for wastewater heat utilisation. It became clear very soon that the RoWin was the type of heat exchanger that would be ideal for the idea of wastewater heat utilisation for Hofmatt.

The old-age and nursery home has been under renovation since 2012 and two new blocks will be added to the building. The modernisation of the building includes a completely new energy concept. The utilisation of the residual heat of the in-house wastewater and canteen play an important role in this concept. The complete wastewater generated in the complex is collected in a shaft in front of the house (see figure 1) and flows then through the HUBER RoWin Wastewater Heat Exchanger. In this process the thermal energy is extracted from the 23 °C warm wastewater flow and delivered to a heat pump.

Comparison with alternative solutions

At the beginning of the planning phase they thought about installing a manually cleaned heat exchanger. With a manually cleaned heat exchanger the wastewater passes through a filter unit when if enters the system to ensure the heat exchanger is protected against coarse material. Due to biofilm formation and lack of preventive surface cleaning the system must be cleaned manually which causes high maintenance costs. In addition, a quite large shaft is necessary to house the heat exchanger.

The contractor EBM therefore decided together with the plant owners and operators to use a HUBER RoWin system which does its job without the need for maintenance due to fully automatic cleaning of the heat exchanger modules. Moreover, a turbulence generator ensures the heat transfer capacity is constantly high even with batch feeding. The installation of a fully automatic screen in the wastewater shaft ensures that the pump and heat exchanger are reliably protected against coarse material. Furthermore, a much smaller wastewater shaft was sufficient. Gas-tight and odour-tight manhole covers were installed in the shaft (see figure 3). It was therefore possible to place the shaft directly next to the building without annoying residents with emissions.

A piston compressor heat pump with direct condensation is used on the heating side. The pump is able to heat the domestic hot water

in the combi storage tanks to up to 70 °C. The district heating connection of EBM Münchenstein is available as 100% backup and to handle peak loads. The idea of the special district heating station with fully integrated plant parts came from HLK Consulting GmbH in Dornach. Their concept included service water warming combined with supplementary heating instead of mere service water warming. This solution was realised already 15 years ago in a number of installations in Basel where exhaust heat from cooling processes was used as a heat source. In this case the heat source is wastewater. ETA Group was responsible for the turnkey supply of the plant. Also the electrical controls for the complete plant came from the pens of ETA Group. The overall plant concept costed not more than the initially planned solution although it additionally provides increased use of the exhaust heat through supplementary heating.

Mechanical equipment

HUBER SE supplied the size 4S HUBER RoWin heat exchanger, the smallest available size, and the ROTAMAT® RoK 1 Storm Screen. The heat exchanger was installed in the basement of the building next to the heat pump (see figure 4).

ETA Group supplied a heat pump with piston compressor and direct condensation which is able to heat the domestic water to up to 70 °C. ETA Group installed Jenni storage tanks which are suitable to be operated with direct condensation. As no other heat exchanger is used system efficiency can be improved and also the achievable temperature rises. Inside the stratified storage tank warm service water is hold available with a temperature of 65 °C in the upper section, with 30-40 °C for heating the building in the middle and with 25 °C in the bottom section for additional cooling of the liquefied cooling agent. The speed-controlled compressor increases the efficiency in partial-load mode.

Operational experience

Plant start-up took place in 2012. Both ETA Group and EBM Münchenstein have given a positive review on the two years operational experience.

Since the teething problems were solved the system has produced 65 °C hot service water and ensured the supply to a large part of the heating with an energy efficiency ratio of 3.2. Maintenance has not been necessary up to now, neither for the heat exchanger nor for the collection shaft.

This project has been ideal for the parties involved to gather experience on a small scale how to operate such plants. They are now well prepared to integrate them when planning bigger projects.

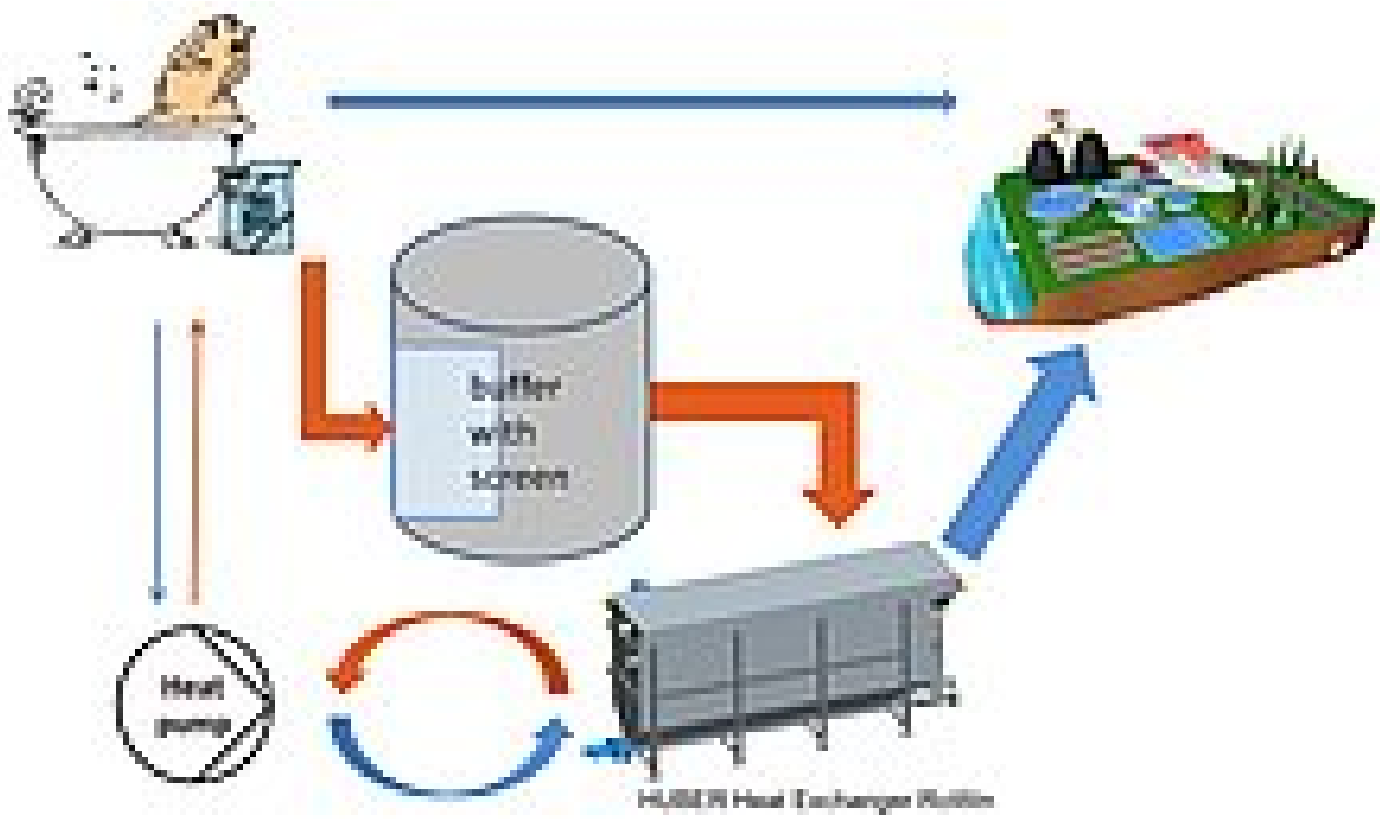

Figure 5: Process diagram of the Hofmatt home

Conclusion

In modern buildings a large part of the heat energy is required to produce hot water which is then discharged to the sewer system and sewage treatment plant without making use of the energy potential contained. This energetic gap can now be closed with the use of wastewater heat. The released energy can be recovered. This reduces the primary energy demand and CO_2 emissions. Wastewater heat utilisation can thus contribute a lot to the overall energetic optimisation of buildings. Wastewater heat utilisation is also acknowledged as a regenerative alternative measure according to the German Renewable Energy Heat Act (EEWärmeG).

Future projects should however not only focus on heat recovery from wastewater alone, also the possibility of cooling with wastewater should be considered. Through simple heat pump circuit reversal the same system that is used to heat the building in winter can be

used for cooling in summer. This results in a significant reduction of the period of amortisation without the need to install additional equipment for cooling.

Due to its more than 130 years company history HUBER is a reliable partner when it comes to project planning and is able to satisfy customers with its technical high-quality products. Thanks to the company's global sales network the technical solutions that are required for wastewater heat utilisation can be made available to customers on all continents of the world.

The easily available resource wastewater, short decision making processes and having both energy source and energy sink under literally one roof are good reasons in favour of such a type of plant. Under appropriate frame conditions it is certainly recommendable to repeat the concept.